Installation Instructions

Evolution® Cable Ring Kit

Intended Use

The Cable Ring kit is intended to be used in the EvolutionÈ Single-Sided Cable Managers only. Ensure that you have the correct Cable Ring kit width to match the manager width.

Parts Included:

Cable Ring, 5 ea.
M5x12 Screw, 10 ea.
M5 Nut, 10 ea.

Tools Required:

8mm wrench
#2 Phillips Screwdriver

Installation

1. The Cable Rings are mounted to the rear flanges of the cable manager using the two innermost pair of holes.
2. Mount each Cable Ring using 2 ea. M5x12 pan head screws & M5 hex flange nuts.

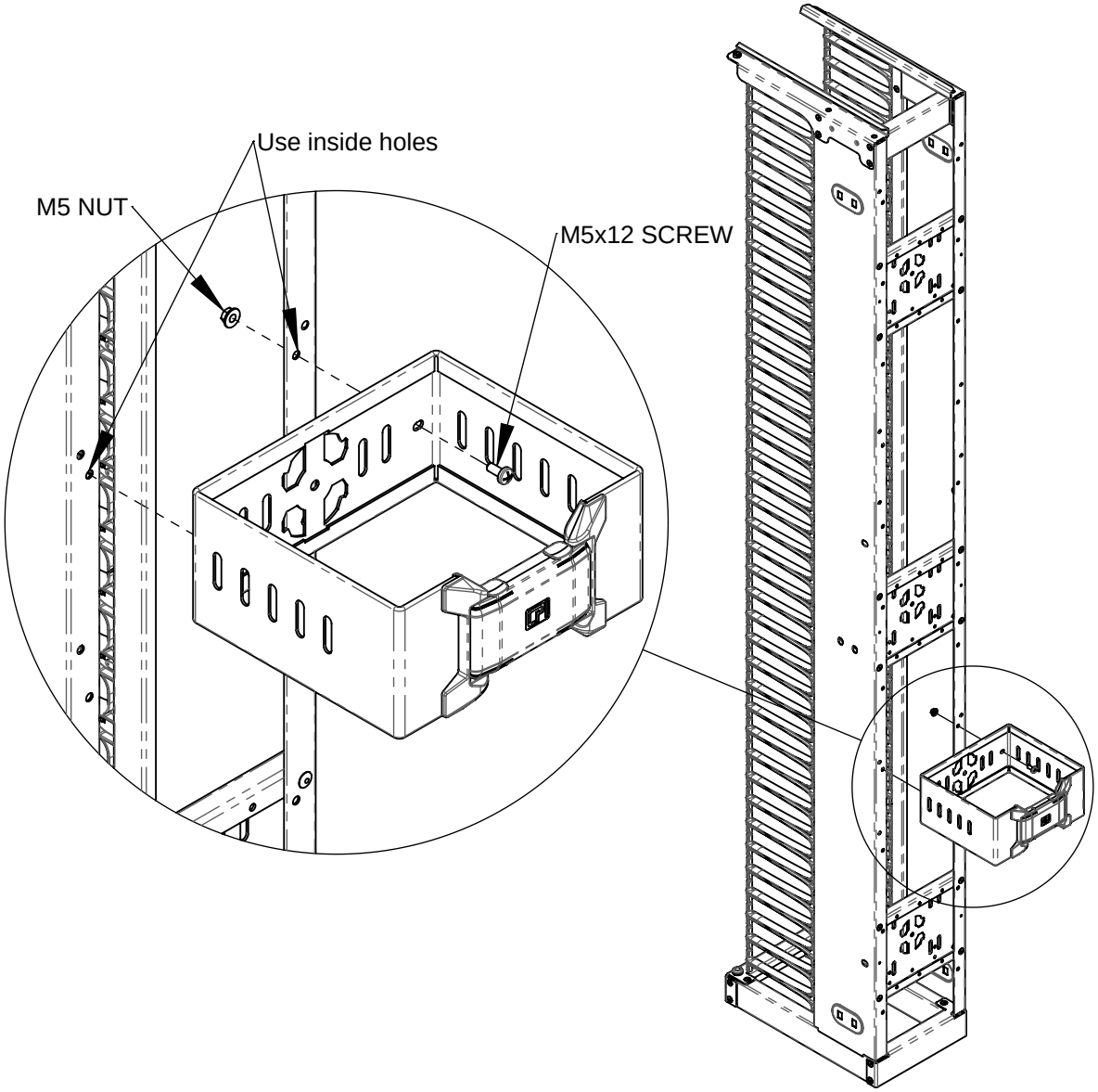

CHATSWORTH PRODUCTS

IIS-733502-001, 9/13/23, Rev. 1, CPI/BDK
800-834-4969 (USA & Canada) Åwww.chatsworth.com Åtechsupport@chatsworth.com
For international phone numbers, see our website or contact CPI Tech Support.

This drawing contains proprietary and confidential information and is protected by U.S. and international law. Unauthorized reproduction, disclosure or use of the drawing or the information therein is expressly forbidden except as agreed to in writing by Chatsworth Products, Inc.